CO04P–04

COMPONENTS

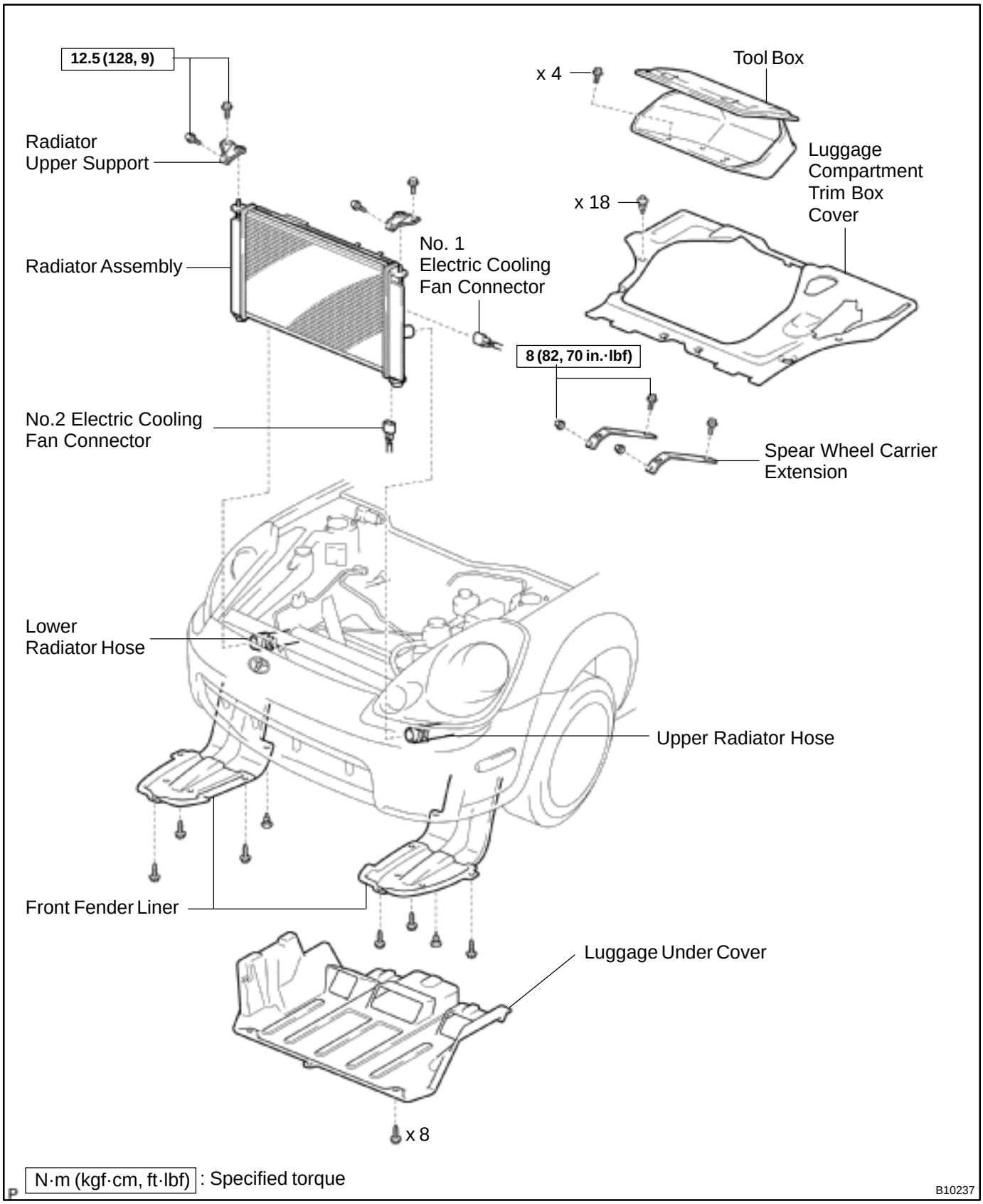

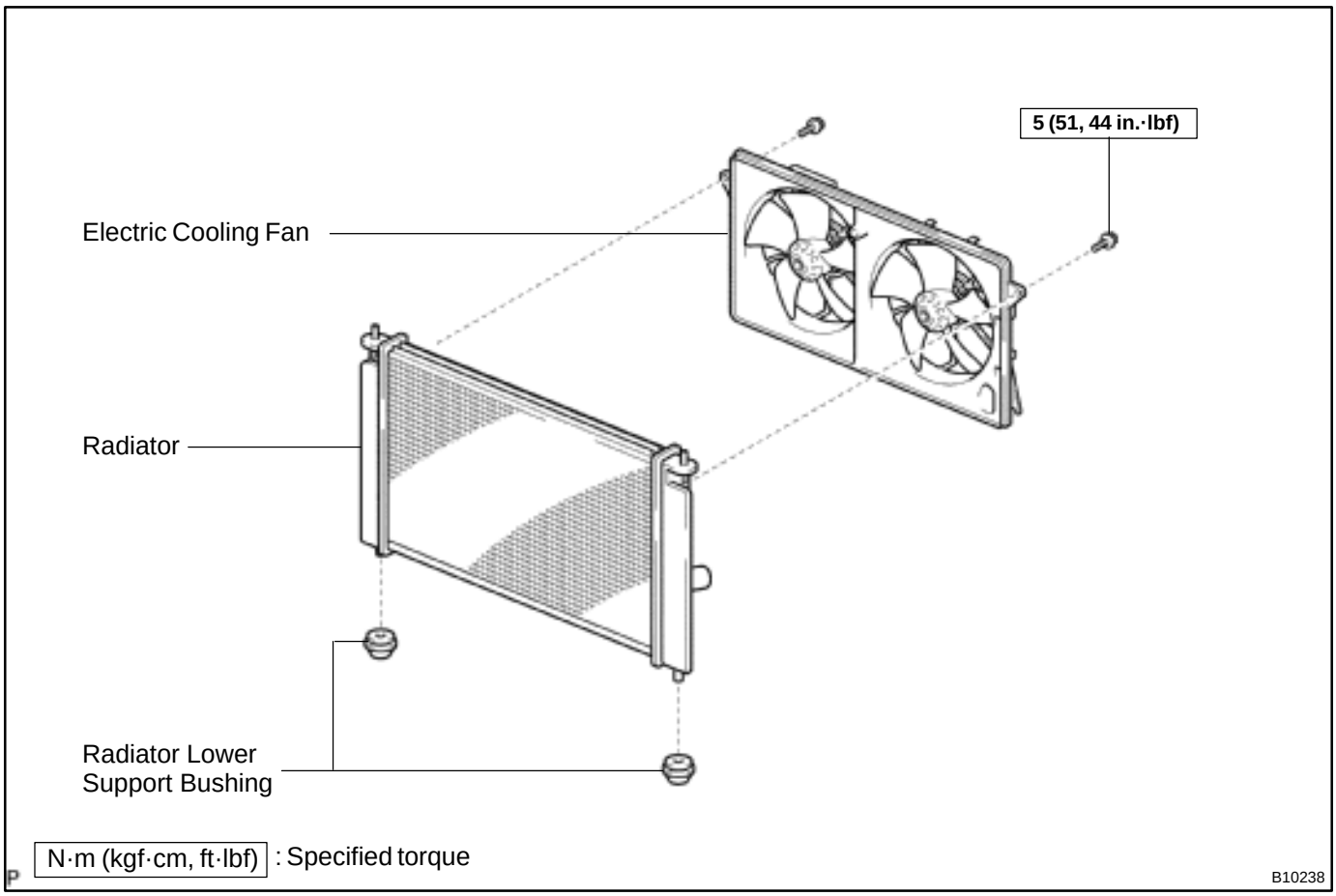
5 (51, 44 in.·lbf)
Electric Cooling Fan
Radiator
Radiator Lower
Support Bushing
N·m (kgf·cm, ft·lbf) : Specified torque
B10238

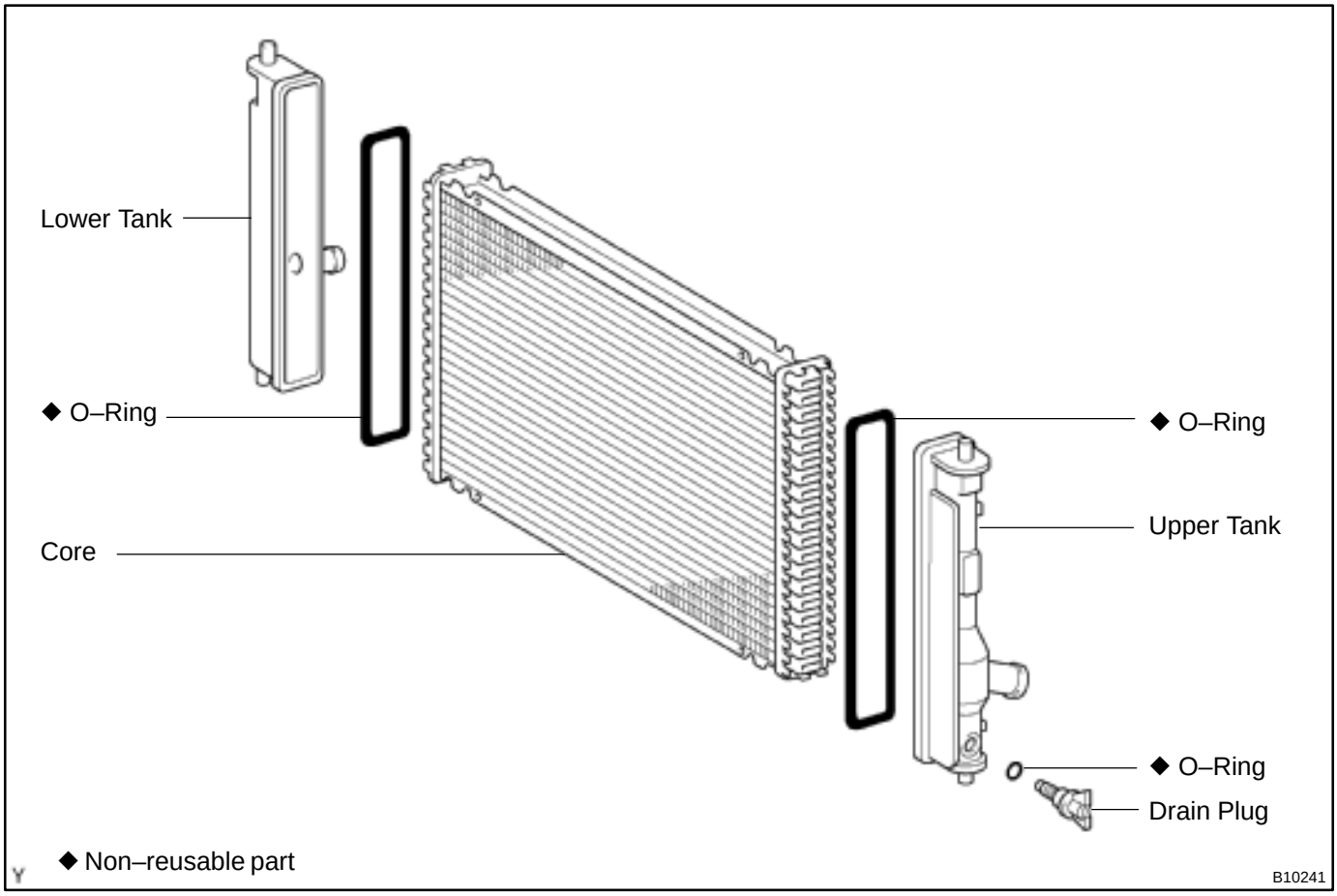
Lower Tank
◆ O–Ring
Core
◆ O–Ring
Upper Tank
◆ O–Ring
Drain Plug
◆ Non–reusable part
B10241